SCHAEFF

Warehousing Series Lift Trucks

ELECTRIC
STAND-UP
COUNTERBALANCE

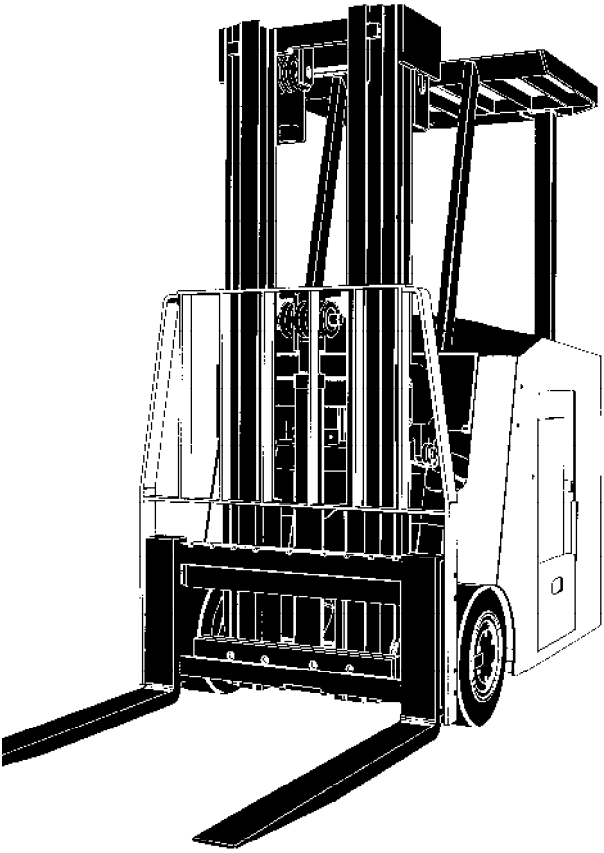

OPERATING MANUAL

WARNING

Failure to observe the following instructions can cause the truck to tip, load to fall, serious injury or death.

- Authorized, trained operator only.
- Read Operating Manual before using.
- Keep all portions of body inside the operator's compartment while operating the truck.
- When stopping, stay inside compartment until truck comes to a complete stop.
- Use caution when traveling.
- Do not carry passengers.
- Never load truck beyond its rated capacity.

Read the entire contents of the Guide to Safe Operation section of this Operating Manual for further safety precautions.

This manual is not intended to be all encompassing and certain maintenance procedures should be supplemented with the information contained in the *Schaeff W-Series Service & Parts Manual* (6840003).

Table of Contents

MESSAGE TO THE OPERATOR

This manual is intended to aid you, the professional forklift operator, in the operation of this forklift. It is intended as a permanent reference, and must be available for the operator to use at any time. If your forklift is not equipped with a copy of this manual, ask your supervisor to obtain one for you.

This manual describes necessary practices to maintain control of your forklift and avoid accidents, injuries, and damage. It is not a substitute for an operator training program. As a professional forklift operator, you are responsible for being in control of your forklift at all times.

While it may not be possible to prevent all accidents, following the guidelines in this manual and being an alert operator who is in control of his/her forklift and drives defensively, will greatly reduce the risk.

You Must Be Trained ii
Not An Automobile 1
General Description & Information 2
Operating Position 4
Operating Controls 5
Start-up Sequence 8
Traveling & Plugging 10
Steering 12
Lifting & Lowering 14
Tilting & Sideshifting 16
Hydraulic Auxiliaries 17
Optional Equipment 18
Warnings & Errors 19
Inspections 20
Stability and Capacity 22
Guide to Safe Operation 25
Battery Care & Information 29
Error Codes 33
Maintenance Points 34
Scheduled Maintenance & Inspections 35
Warning Decals 36

SCHAEFF INC.
P.O. Box 9700
Sioux City, IA 51102-9700 USA
Phone (712) 944-5111 Fax (712) 944-5115

P/N 684100 First Printing (June 15, 1999)

You Must Be Trained

Federal law states that only trained and authorized operators are permitted to operate a powered industrial truck and that your employer must train operators in the safe operation of powered industrial trucks. It is also the employer's responsibility to make sure that the operator can see, hear, and has the physical and mental ability to operate the equipment safely.
(OSHA § 1910.178)

⚠ WARNING

DO NOT OPERATE THIS FORKLIFT UNTIL YOU HAVE BEEN TRAINED AND AUTHORIZED BY YOUR EMPLOYER.

YOU COULD BE KILLED OR SERIOUSLY INJURED IF YOU ARE NOT TRAINED TO OPERATE THIS FORKLIFT!

BEFORE OPERATING THIS FORKLIFT:

- **YOU MUST SUCCESSFULLY COMPLETE A TRAINING AND EVALUATION PROGRAM WHICH IS SPECIFIC TO THE TYPE OF TRUCK AND THE WORKPLACE.**
  Schaeff offers operator training materials for this model forklift.
- **READ THE ENTIRE OPERATING MANUAL**
  - Pay particular attention to the **cautions and warnings**, which are identified throughout this manual as follows:
  - After studying this manual carefully, **leave the manual with the forklift for reference.**

⚠ WARNING

WARNING denotes a serious hazard which could cause injury or death to the operator or other personnel.

⚠ CAUTION

CAUTION denotes a less serious hazard which could cause less serious injury to the operator or other personnel or damage to the forklift.

- **BECOME FAMILIAR WITH THE LOCATION AND FUNCTION OF ALL CONTROLS**
- **READ ALL SAFETY AND WARNING DECALS ON THE FORKLIFT**
  - Warning decals and their locations are shown on Pages 36 & 37

Not An Automobile

Your forklift is not an automobile. With a load, it may weigh as much as three automobiles.

- **It does not drive like an automobile.**
- **It does not steer like an automobile.**
- **It does not brake like an automobile.**

SPECIAL APPLICATIONS/SITUATIONS

This forklift should never be used for any functions other than those designated for stand-up counterbalance lift trucks. This forklift is designed for indoor use and should not be exposed to outside weather conditions, including rain or snow, and is not intended for use on public roads.

Before placing this truck in a special application or situation, contact your authorized *SCHAEFF* dealer for correct procedures

STANDARDS COMPLIANCE

This vehicle complies with **American National Standards (ANSI)** and **Occupational Safety and Health Act (OSHA)** regulations in effect at the date of manufacture and is **Underwriters Laboratory (UL)** classified (see the Serial ID Nameplate).

Contact your authorized *SCHAEFF* dealer before making any alteration or modification to this vehicle.

If you should ever have any questions regarding training, or if your forklift requires service, contact your authorized Schaeff dealer.

General Description & Information

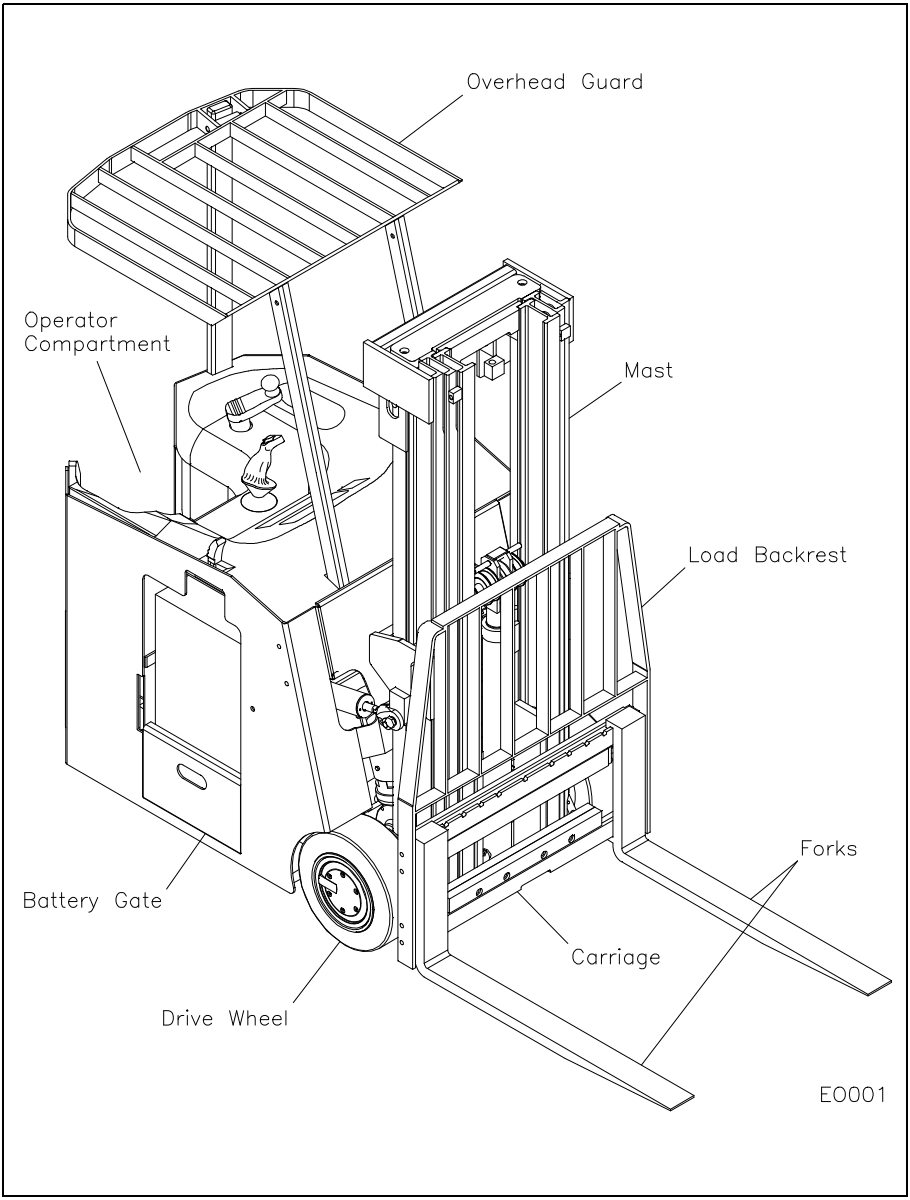

Your ***Schaeff*** forklift is an electric, stand-up, counterbalanced material handling vehicle. It is driven by the front wheels and steered by the rear wheel. An industrial battery provides power.

Your ***Schaeff*** forklift may be equipped with any or all of the following features which make its operating characteristics different from other forklifts of this type:

- Multi-function control handle - see Page 6
- Electric Emergency / Parking Brakes - see Page 7
- Speed reduction in turns - see Page 13
- Lift Interrupt - see Page 15
- The following characteristics can be changed through the Program menu (ask your supervisor):
  - Maximum Forward and Reverse Speeds
  - Drive Acceleration and Plugging Rate
  - Time delay before automatic power down if controls are not touched

Your forklift may have optional equipment installed which can change some operating characteristics described in this manual. **Make sure the necessary instructions are available and understood before operating this forklift.**

All information, specifications and illustrations in this manual are based on the latest available data at the time of publication. ***Schaeff*** is constantly striving to improve its products and therefore reserves the right to change design, materials, and/or specifications without notice and without incurring obligation or liability.

Correct operating positions are shown in the photos below.

Operating Position

- Step onto the forklift with your right foot first. Do not step on the brake pedal until you are completely inside the operator compartment. Do not move the controls until you are completely inside the operator compartment.
- On both forward and side stance models, grasp the control handle in your right hand and the steering tiller in your left hand.
- Always keep both feet in the operator compartment. Use only your left foot on the brake pedal.
- Take advantage of the padding in the operator compartment.

FORWARD STANCE

SIDE STANCE

Operating Controls

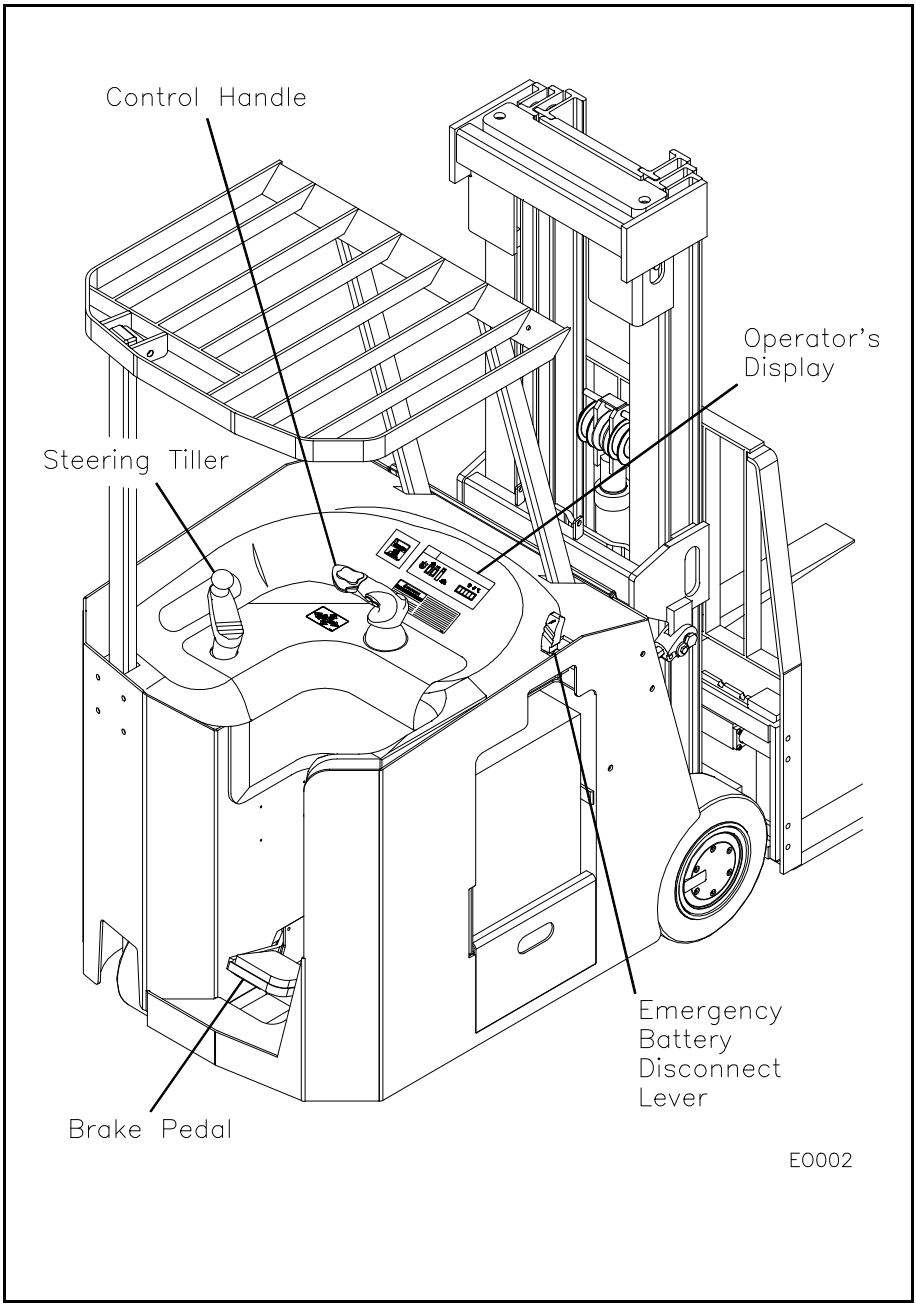

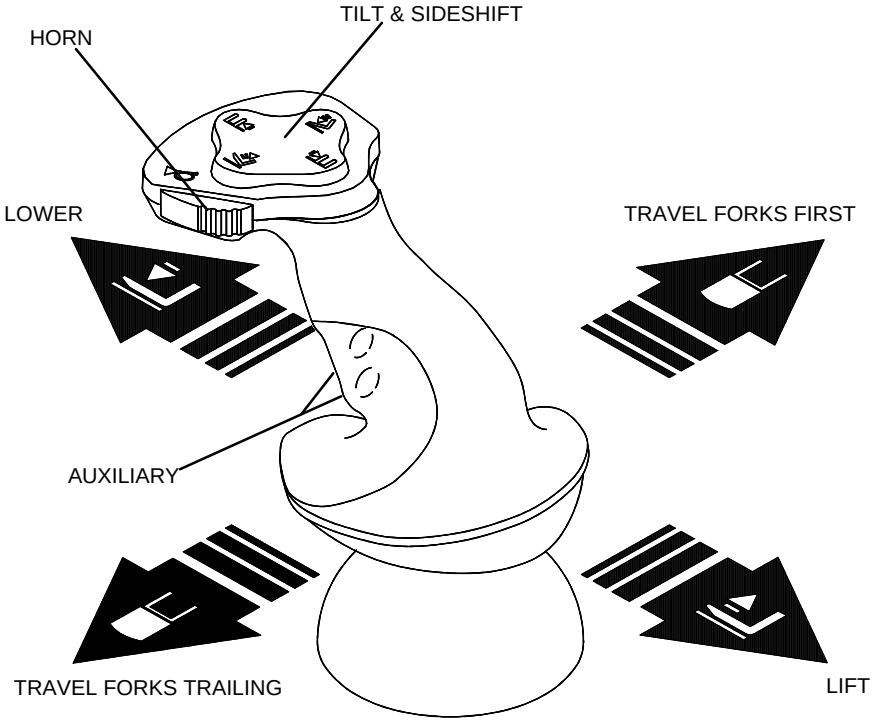

CONTROL HANDLE

OPERATOR'S DISPLAY

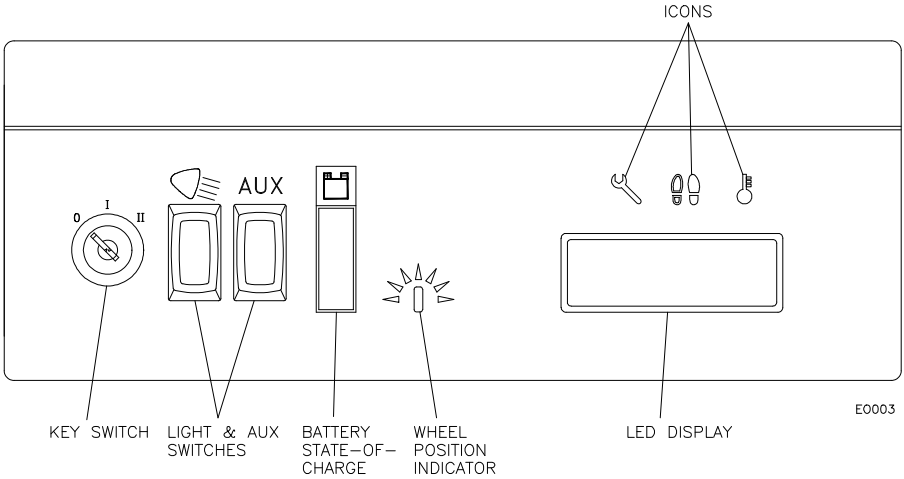

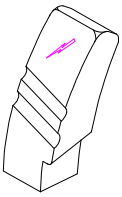

EMERGENCY DISCONNECT LEVER

Push the disconnect lever toward the forks to mechanically separate the battery connectors and shut off all power (the key switch does not cut all power to the forklift). To reconnect the battery, align the mating halves of the connectors and push them together.

⚠ CAUTION

A cap screw and lock nut must be correctly fastened to the battery connector for the emergency disconnect lever to operate correctly.

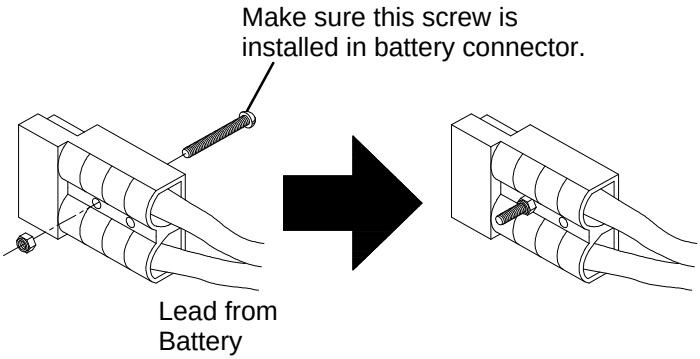

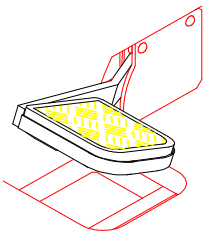

BRAKE PEDAL

- Step all the way down on the pedal to release the brakes and enable the drive system.
- Let the brake pedal rise to apply the brakes. As soon as the pedal starts to lift, power is cut to the drive motors. DO NOT use the brake pedal as the service brake.

⚠ WARNING

- **NEVER use two feet on the brake pedal.**
- **Release the brake pedal only in an emergency. The forklift will stop abruptly which may cause the load to fall.**
- **Always travel at a speed which will allow you to stop in a safe manner.**

Start-up Sequence

DO NOT OPERATE THIS FORKLIFT UNLESS:

- ☑ **YOU HAVE BEEN TRAINED AND AUTHORIZED**
- ☑ **YOU HAVE READ AND UNDERSTAND THIS ENTIRE MANUAL**
- ☑ **YOU KNOW THE CAPACITY (WEIGHT AT LOAD CENTER AND LIFT HEIGHT) OF THIS FORKLIFT**
- ☑ **YOU HAVE COMPLETED THE PRE-OPERATIONAL INSPECTIONS (PAGE 20)**

NOTE

If the Start-up Sequence is not followed correctly, the truck will not run, and an error code may be displayed. Some codes alert the operator to change his actions, others relate to truck service issues. See Page 33 for a description of the operator-induced errors.

1. Step into the operator compartment. DO NOT step on the brake pedal or move the control handle at this time. Keep all parts of your body inside the operator compartment at all times.

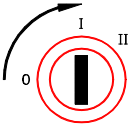

2. Turn the key clockwise to the "I" position. At this point, the LED Display will show the Battery State-of-Charge:
   b-82
   Other information can be viewed by pressing tilt forward or tilt backward on the control handle. This information includes: Hour Meter (hours), Serial Number (ser n), and Software Version (code). The Perf selection is used to access the Performance and Diagnostics Menu (refer to the Quick Reference Guide).

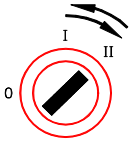

3. Turn the key clockwise to the "II" position and release it (like starting an automobile).

4. Wait for the self-test to finish. NOTE: the brake pedal must be up (brakes engaged) and the control handle in neutral during the self-test. If the brake pedal is not up during POST, fault code E82 will be displayed.

   If a problem is detected during POST, a fault code will appear in the LED Display **(Fault Code descriptions can be found on the underside of the top cover). Notify your supervisor if anything is wrong with the forklift.**

   If the control system finds no problems, the LED Display will say on___. The forklift is ready to operate. If fault codes E01 or E02 are displayed, you must return the control handle to neutral and step on the brake pedal to resume operation.

☑ **PERFORM THE OPERATIONAL INSPECTIONS (SEE PAGE 21)**

5. You may now operate the forklift.

WHEN YOU LEAVE THE FORKLIFT, TURN THE KEY TO THE "0" POSITION TO SHUT THE FORKLIFT OFF. REMOVE THE KEY.

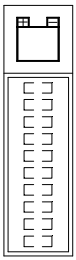

BATTERY STATE OF CHARGE INDICATOR

This indicator (on the Operator's Display, Page 6) shows the percentage of charge remaining in the battery *before lift cutout occurs*. Each of the LEDs represent 10% of the remaining charge. When less than 5% remains before lift cutout, the last LED will start to flash slowly, changing to a fast flash when it drops below 2%. When the battery is discharged to the lift cutout point, all LEDs will be off.

LED DISPLAY

During operation the LED Display can present the following information:

e01

FAULTS - if a problem is detected, the fault code will appear on the LED Display (see *Fault Codes* on Page 33 or the Fault Code decal under the top cover).

Traveling & Plugging

TRAVEL

- Move the control handle toward the forks to travel forks first.
- Move the control handle away from the forks to travel with forks trailing.
- The farther you move the handle from neutral, the faster the forklift will travel.
- Read the Guide to Safe Operation (Pages 25 - 28) before operating this forklift.

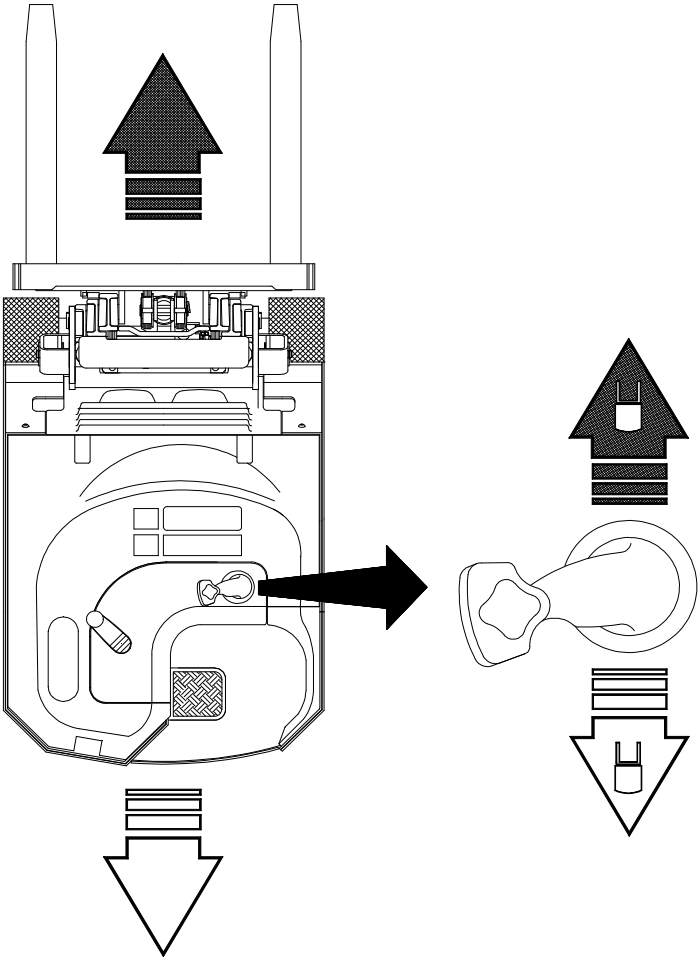

PLUGGING

- To slow down or stop, move the control handle in the direction opposite of travel. Slowing by reversing direction is called plugging and will not damage the drive system.
- The brakes are designed to stop the forklift in a shorter distance than plugging. Release the brake pedal to stop in an emergency.

⚠WARNING

Plugging works only when the brake pedal is all the way down. When the brake pedal begins to lift, power is cut to the drive system and you will not be able to use plugging.

⚠CAUTION

The forklift will roll freely when the control handle is in neutral and the brake pedal is down. You must use plugging to slow down or stop, or lift your left foot from the brake pedal to stop in an emergency.

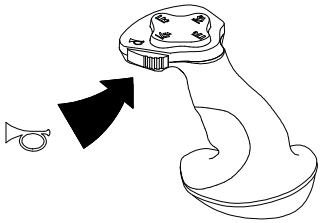

HORN

Sound the horn to warn pedestrians and other drivers of your presence. Use it at intersections and crosswalks.

Steering

Your forklift may be equipped with standard or reverse steering. Either way, it does not steer like an automobile. Drive slowly until you get used to the steering and all other controls.

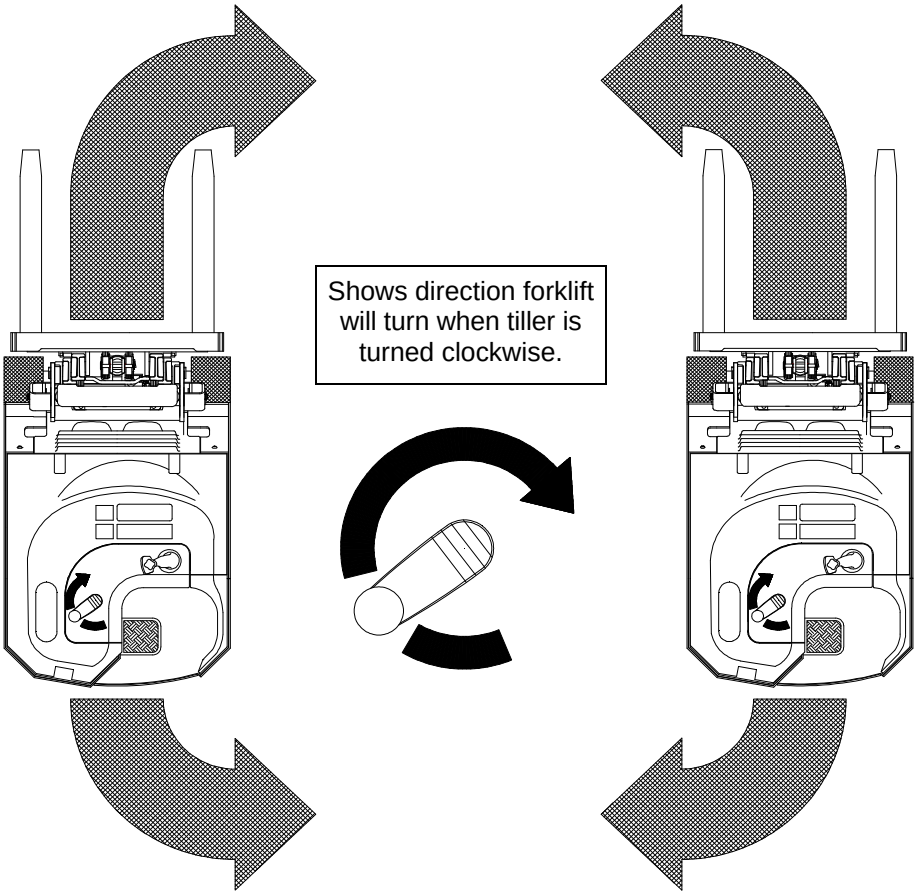

STANDARD STEERING

REVERSE STEERING

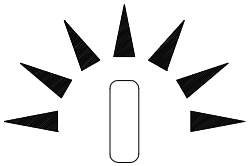

STEER WHEEL POSITION INDICATOR
Located on the Operator's Display (see Page 6). LEDs light one or two at a time to indicate the angle of the steer wheels, *not direction of turn*. Check this indicator before starting to travel.

SPEED REDUCTION IN TURNS

When you begin a turn, the drive system automatically reduces travel speed. The sharper the turn, the more your speed is reduced.

When you come out of a turn, the drive system automatically increases speed.

⚠ WARNING

- **Side tipover can occur if you are traveling too fast when turning, especially with an elevated load.**
- **Side tipover can occur due to excessive braking, plugging, or acceleration while turning.**
- **Never turn on a ramp, slope, or grade.**

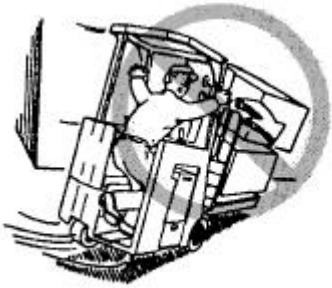

⚠ WARNING

Be careful when turning while traveling forks first. The rear end of the forklift will swing wide in the opposite direction. This is called tailswing. The load also will swing wide when turning with the forks trailing. Make sure you have enough clearance and watch out for people in the tailswing and loadswing areas.

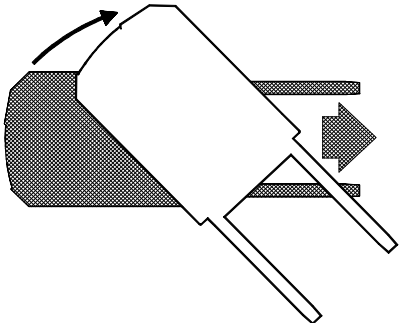

Lifting & Lowering

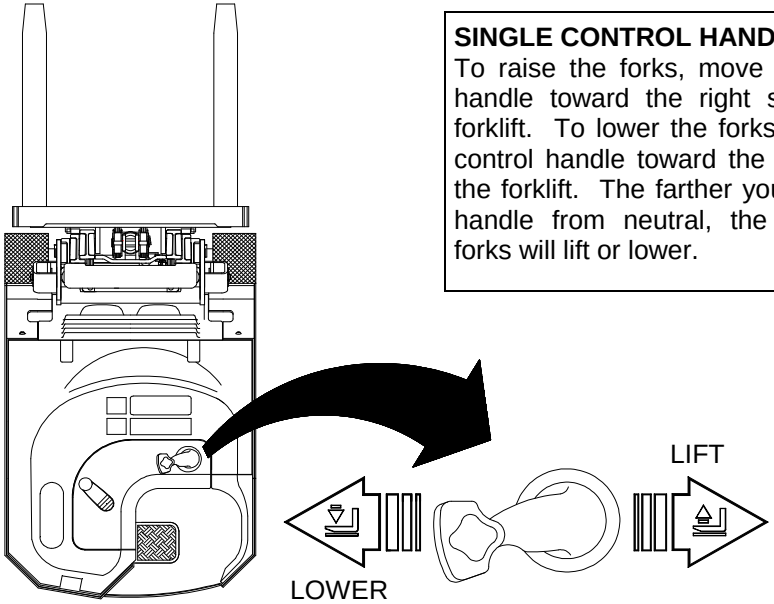

SINGLE CONTROL HANDLE
To raise the forks, move the control handle toward the right side of the forklift. To lower the forks, move the control handle toward the left side of the forklift. The farther you move the handle from neutral, the faster the forks will lift or lower.

LIFT CUTOUT / INTERRUPT

- LIFT CUTOUT - When the battery state of charge reaches the programmed limit, the lift system will be shut down and a fault code and message will be scrolled on the Operator's Display.

- LIFT INTERRUPT - Depending on how your forklift is programmed, the lift system may be disabled:
  - when the brake pedal is released; or
  - when traveling with the forks trailing; or
  - when the forks reach a certain height.

⚠ CAUTION

- **DO NOT travel with the load elevated.**
- **Lift and lower with the mast vertical or tilted slightly back.**
- **Watch out for overhead obstructions such as lights, pipes, beams, etc.**

MANUAL LOWERING VALVE
If you are unable to lower the mast with the control handle, you can use the manual lowering control. Remove the top cover to gain access to the manual lowering valve at the left front corner of the forklift. The manual lowering valve is a screw-type. Turn it counter-clockwise to lower the mast. Close the valve completely when the mast is lowered.

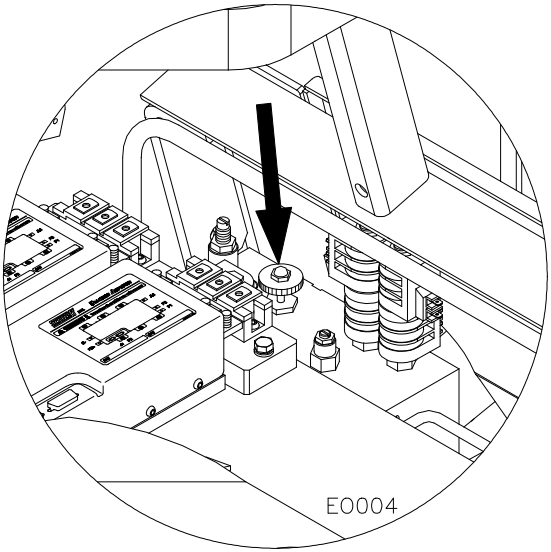

Tilting & Sideshifting

Tilting the mast and sideshifting the carriage are controlled by a four-position rocker switch on the control handle. These are single speed functions.

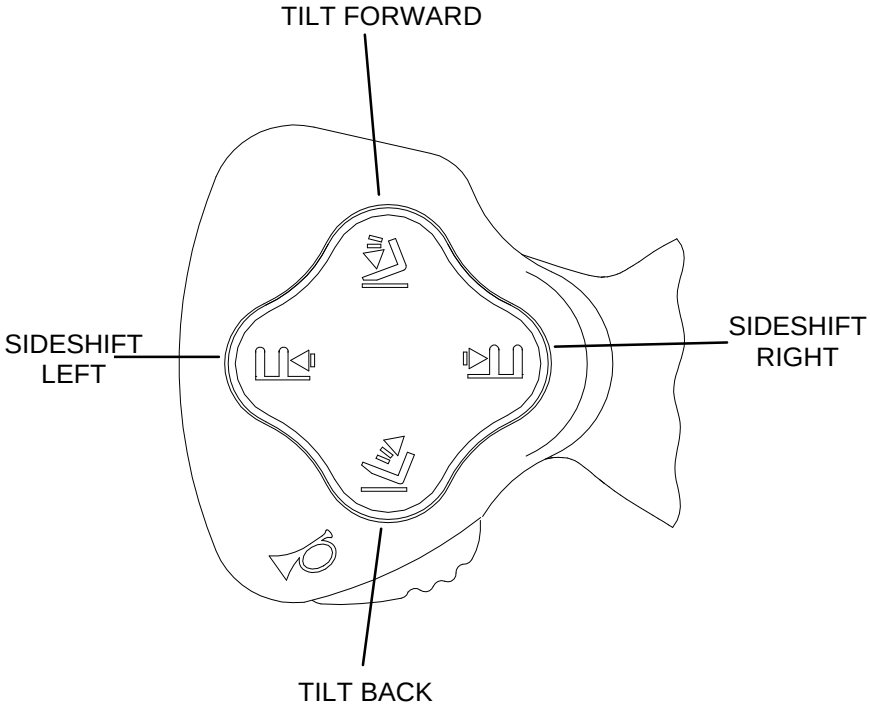

⚠ CAUTION

- **When the load is elevated, keep the tilt angle in either direction to a minimum.**
- **Tilt the load forward only when directly over the stack or rack.**
- **When sideshift and/or attachment(s) are provided, lift, lower, or travel with forks/attachments retracted and centered. Extend or sideshift forks/attachments only when picking up or depositing a load.**

Hydraulic Auxiliaries

Use the AUX button on the control handle to change control between sideshift and an auxiliary hydraulic attachment (fork positioner, push/pull, clamp, etc.)

Press Sideshift Left and Sideshift Right (see Page 16) to operate the auxiliary hydraulic attachment. This is a single speed function.

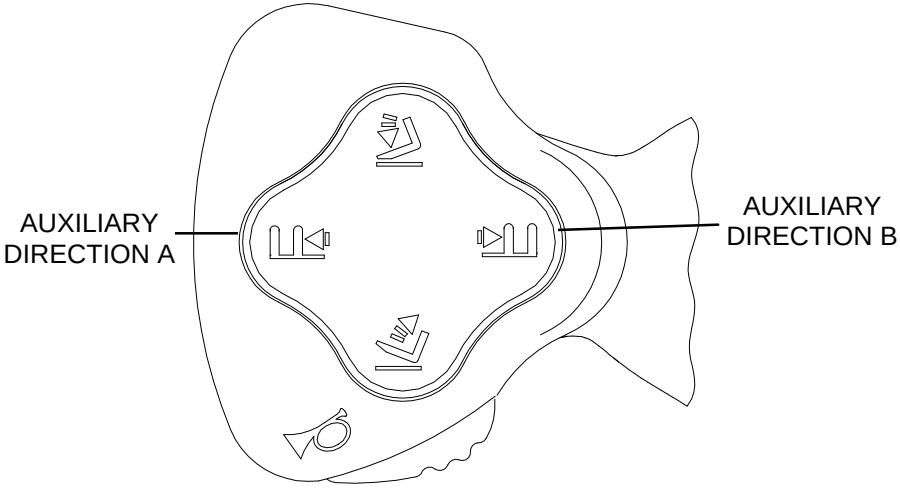

Optional Equipment

WORK LIGHTS
Your forklift may be equipped with lights on the overhead guard or mast. Use them when the lighting in your work area is not adequate. The on/off switch for the work lights is on the Operator's Display next to the key switch.

FLASHING LIGHT
Your forklift may be equipped with a flashing light. Make sure this light is on whenever the forklift is turned on.

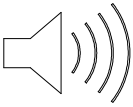

TRAVEL ALARM
Your forklift can be programmed to sound an alarm when traveling in either direction or both directions.

FLOORPAD SWITCH
If your forklift is equipped with a switch in the floorpad, the **Right Foot Alert Icon** will light when your right foot is up, and if the switch is not activated within a short period, the horn will sound. If the switch is still not activated the truck will coast to a stop and a fault code will be displayed.

OPERATOR COMPARTMENT DOOR
Ask your supervisor for specific instructions if your forklift is equipped with an operator compartment door.

Your forklift may have other options or attachments not listed in this manual. Optional equipment can change some operating characteristics described in this manual. **Make sure the necessary instructions are available and understood before operating this forklift.**

Warnings & Errors

Warning and Error messages are displayed whenever the control system detects a problem. The problem may be an incorrect operating procedure, a faulty component of the forklift, etc. Some warnings and errors will slow or shut down operation of the forklift.

- For example, if you move the control handle forward or backward before stepping on the brake pedal, you will see "e01" on the LED Display and the forklift will not travel.

Some of the Fault Codes are also indicated by lit Icons on the Operator's Display (see Page 6).

OVER-TEMPERATURE ALERT ICON
This icon is lit and a message is displayed when any of the motors or controllers become HOT or OVERHEATED. When any system is OVERHEATED, it is shut down.
If overheating occurs: turn off the forklift, disconnect the battery, and notify your supervisor immediately.

⚠ CAUTION

SERVICE ALERT ICON
This icon is lit in conjunction with certain error codes or fault conditions. See Page 33 for a list of fault codes.

Inspections

Complete the following inspections daily and before each use for safe and effective operation. Report anything wrong to your supervisor.

DO NOT OPERATE THE FORKLIFT IF THERE IS ANYTHING WRONG.

If you are not qualified to inspect the forklift or do not know the proper inspection procedure, contact your authorized ***Schaeff*** dealer.

This and other maintenance information contained in the Operating Manual is not intended to be all inclusive and should be supplemented with the information contained in the *Service & Parts Manual (Part # 6841003)*.

PRE-OPERATIONAL INSPECTIONS

Look over the forklift carefully. Be particularly alert for anything unusual or unsafe, such as leaks, loose bolts, or cracked welds.

- Inspect the battery for the following:
  - fully charged
  - no acid leak, vent caps in place
  - securely in place and battery gates properly installed
  - connector in good condition & properly attached to mating connector
  - Emergency Disconnect operates properly
- Ensure all guards and covers are properly installed.
- Check the wearable surface of the drive and steer tires for damage.
- Hydraulic hoses must be in good condition.
- Lift chains must show no signs of wear or damage.
- Forks must not be bent, cracked or badly worn.
- Control handle must return to neutral when released.
- Static strap (attached to frame under brake pedal) touches ground.
- Warning and accessory lights must operate properly.
- Safety decals must be in place and legible.

⚠ WARNING

DO NOT work under a raised carriage. Lower the carriage and forks to the floor when performing visual checks on the forklift.

OPERATIONAL INSPECTIONS

Refer to the Start-up Sequence (Pages 8 - 9).

Test drive your forklift in an open area. Listen for any unusual noise, and check the following items:

- Operator's Display - no fault messages displayed, all LEDs functional.
- Lift/lower - smooth and responsive to commands; does not lift or lower when the handle is in neutral.
- Test all hydraulic functions for smooth operation.
- Travel control - smooth and responsive, does not creep with control handle in neutral.
- Plugging - travel slowly and test. Note the distance required to stop.
- Steering - smooth and responsive.
- Horn - sound it.
- Brake pedal - disables travel and applies brakes when released. Note the distance required to stop.

DO NOT operate your forklift if you find a problem. Report the problem

⚠ CAUTION

to your supervisor.

DO NOT start or operate your forklift, including any of its functions or

⚠ CAUTION

attachments, from any place other than the designated operating position.

Stability and Capacity

STABILITY AND CENTER OF GRAVITY

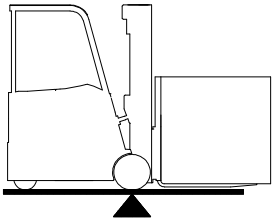

The forklift uses the same principle as a see-saw; two weights balanced on opposite sides of a pivot point. On a forklift, the pivot point is at the front wheels, and the weight of the load must be counterbalanced by the weight of the forklift.

The center of gravity (CG) of any object is the point about which the object is balanced in all directions. The forklift and load each have a CG. When you pick up a load, the forklift and load have a new combined CG. The stability of the forklift is determined by the location of its CG, or if the forklift is loaded, the combined CG.

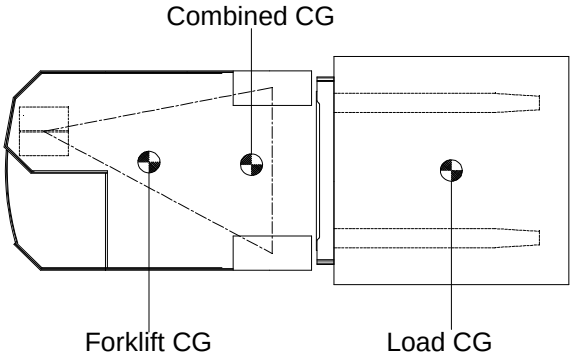

The combined CG moves up and down as the forks move up and down. The combined CG moves forward and back as the mast is tilted forward and back. Other factors that affect the stability of the forklift include: tire condition, acceleration, braking, turning, and operating on uneven surfaces or on an incline. These factors must be considered when traveling with an unloaded forklift as well, because **an unloaded forklift will tip over to the side easier** than a loaded forklift with its load in the lowered position.

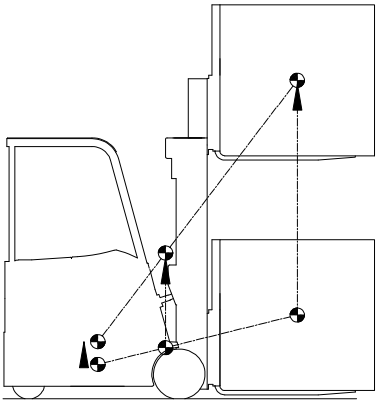

In order for the forklift to be stable (not tip over forward or to the side) the combined CG must stay within the area represented by a triangle drawn between the drive wheels and the steer wheel.

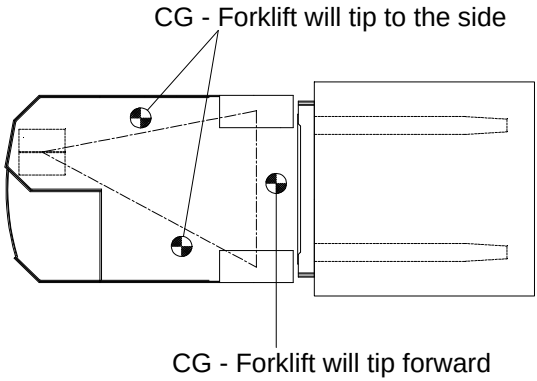

If the CG moves forward of the drive wheels, the forklift will tip forward. If the CG moves outside of the lines drawn between the drive wheels and the steer wheels, the forklift will tip to that side.

CAPACITY (WEIGHT AND LOAD CENTER)

The capacity is the maximum weight of a load (including pallet or container) at a specified load center that can be lifted to a specified height. The load center of a load is the distance from the front face of the forks to the CG of the load.

The capacity of your forklift is shown on the Specification/Identification (SID) Nameplate in the operator compartment. The capacity is listed in terms of weight and load center at several heights. The weight is specified in pounds or kilograms. The heights and load center are listed in inches or millimeters.

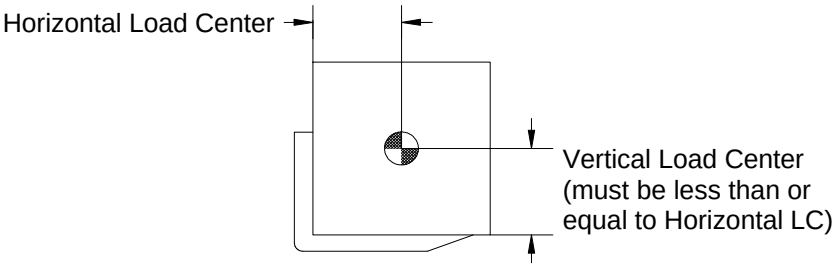

Always refer to the SID nameplate of your forklift for capacity information.

⚠ WARNING

- **CAPACITIES LISTED ARE WITH MAST VERTICAL; FORWARD TILT CAN CAUSE THE FORKLIFT TO TIP FORWARD.**
- **AS THE LIFT HEIGHT INCREASES, THE WEIGHT CAPACITY DECREASES.**
- **ATTACHMENTS MAY AFFECT THE CAPACITY OF THE FORKLIFT.**
- **ANY CHANGES TO THE FORKLIFT OR ITS EQUIPMENT MAY AFFECT THE LIFTING CAPACITY.**
- **THE FORKLIFT MUST BE RATED AS EQUIPPED AND THE SID NAMEPLATE(S) MUST SHOW THE NEW CAPACITY. CONTACT YOUR *SCHAEFF* DEALER IF A NEW SID NAMEPLATE IS NEEDED.**

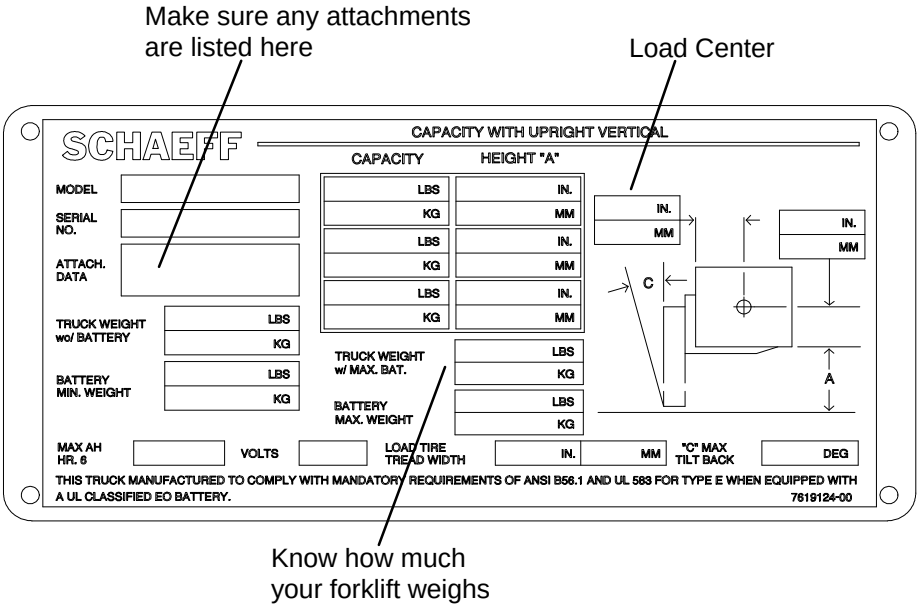

Specification/Identification Nameplate

Guide to Safe Operation

⚠ WARNING

FAILURE TO OBSERVE THE FOLLOWING INSTRUCTIONS CAN CAUSE THE FORKLIFT TO TIP, LOAD TO FALL, SERIOUS INJURY OR DEATH.

AUTHORIZED AND TRAINED OPERATOR ONLY

- You must be trained and authorized to use this forklift.
- Read the entire Operating Manual before operating this forklift.
- You must know the capacity (weight, load center, and lift height) of your forklift. This information is on the Serial Nameplate. DO NOT exceed the capacity of your forklift.
- Know the weight of your forklift. This information is on the Serial Nameplate. Dockboards, elevators, and some floors have limited capacity.
- Know the operating instructions of any attachments and use the attachments for the intended purpose only.
- Know the type of your forklift. This information is found on the markings shown below. Some areas contain hazardous flammable gases, liquid, dust, fibers, or other materials. Make sure your forklift is the correct type for the area.

MAKE SURE THE FORKLIFT IS READY

- Inspect your forklift before operating. Report any problem to your supervisor.
- Make sure the forklift is equipped with an overhead guard and load backrest adequate for the load.
- Report any unsafe condition immediately. DO NOT operate the forklift until corrected.
- Travel slowly in an open area and test the brakes and plugging. Know the distance required to stop safely.

Guide to Safe Operation cont'd

BE AWARE OF OTHER PEOPLE

- Watch out for pedestrians at all times. DO NOT drive up close to anyone standing in front of an object. Use extra care at cross aisles, doorways, and other locations where pedestrians can step into the path of travel of the forklift. Slow down when approaching blind intersections or turns. Sound the horn to warn pedestrians that there is a vehicle in the area and to be alert to possible danger.
- **No Riders.** A forklift is built for only one person, the operator. It is dangerous for anyone to ride on the forks or anywhere else on the forklift.
- Never lift anyone on the forks unless they are using an approved safety platform. Even then use extreme caution.
- Do not allow anyone on or under the load or forks.
- Keep hands and arms clear of the mast.
- Don't let anyone use your forklift unless he or she is trained and authorized.

DRIVE CAREFULLY

- Anytime the forklift is moving keep your arms, legs, etc., inside the operator compartment. Arms and legs outside the forklift can be crushed or cut off when passing obstructions.
- Observe traffic rules and be in full control of the forklift at all times.
- Always look in the direction of travel. Normally, direction of travel is determined by the best visibility available to you. If you must travel in a direction where visibility is obstructed, a lookout or helper may be required.
- Watch clearances, especially forks, mast, overhead guard, and tailswing.
- DO NOT indulge in stunt driving or horseplay.
- DO NOT pass another vehicle traveling in the same direction at intersections, blind spots, or at other dangerous locations.
- Under all travel conditions, operate the forklift at a speed that will permit it to be brought to a stop in a safe manner.
- Avoid fast starts and stops. Sudden movement can cause the forklift to tip or the load to fall.
- Always travel with the load as low as possible and tilted backward. Keep the load against the carriage.

LIFT AND LOAD CAREFULLY

- Handle only loads within the capacity of your forklift as shown on the nameplate.
- Handle only stable loads. Do not handle a load if any loose part of it is above the load backrest or any part of the load is likely to fall.
- Position each fork the same distance from the center of the carriage. Set the forks as far apart as possible for maximum support of the load. Center the weight of the load between the forks. Make sure the pins that keep the forks in position are engaged so that the forks cannot move.
- Be careful of forks that extend past the load so that materials or equipment that are behind are not damaged.
- Lift and lower with the mast vertical or tilted slightly backward from vertical. Tilt elevated loads forward only when directly over the unloading place. If the mast is raised to pick up or deposit a load, keep the tilt angle in either direction to a minimum.

RAMP, SLOPE, OR GRADE OPERATION

- w While carrying a **load**, the load should be upgrade when ascending or descending.
- w If the vehicle is **empty** (no load on forks), the forks should be downgrade when ascending or descending.
- w Lift the load just enough to clear the ramp.
- w Ensure the forklift is square with the ramp before ascending or descending.
- w DO NOT turn on a ramp, slope, or grade - side tipover can occur.
- w DO NOT drive across a ramp, slope, or grade -- side tipover can occur.
- w DO NOT operate on a ramp with a grade of more than 15 percent.

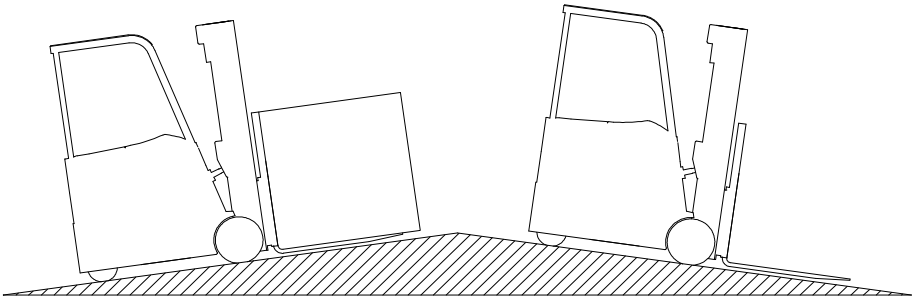

Guide to Safe Operation cont'd

AVOID FALLS AND TIPOVERS

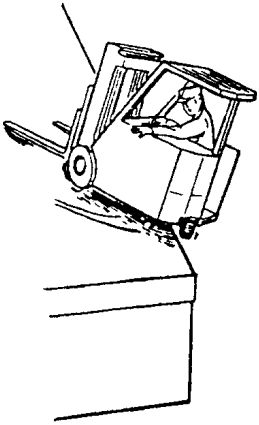

- Forklift tipover can cause serious injury or death if you are trapped between the forklift and the ground.
- Maintain a safe distance from the edge of docks, ramps, and other elevated working surfaces.
- Make sure a highway truck or trailer cannot roll or be driven away from the dock during loading and unloading by using wheel chocks or an approved dock locking device.
- Avoid bumps, holes, slick spots and loose materials that may cause the forklift to swerve or tip.
- Always keep the load upgrade when traveling on a ramp or other slope, and never turn on or drive across a ramp or slope.
- DO NOT use aggressive braking or acceleration, especially with an elevated load.
- Keep the mast vertical when the load is raised. Excessive forward tilt can cause the forklift to tip over.
- While there is no sure way, in all circumstances, to avoid injury during a tipover or a drop from a dock or dock board, you should be aware of the following recommendations in accordance with ITA:
  - If you can safely get completely clear, you should step off and away from the falling or tipping forklift.
  - In the event of an imminent collision, you should stay within the operator compartment.
  - Ask your supervisor about special precautions or operating instructions for your workplace.

PARKING YOUR FORKLIFT

- Wait for the forklift to come to a complete stop before getting off.
- Lower the forks to the floor.
- Turn the key switch to the "0" (Off) position. Remove the key and disconnect the battery.
- Avoid parking on inclines. If you must leave the forklift on an incline, put blocks on the downhill side of the wheels.
- DO NOT park the forklift so that it limits access to fire aisles, stairways, and fire equipment.

Battery Care & Information

Read and follow the instructions supplied with the battery used in your forklift. If anything regarding the use or maintenance of the battery is unclear, contact the battery supplier for complete information.

Battery care is important to the use of the forklift. The useful life of the battery can be lengthened by following a scheduled maintenance program.

The information in this section does not replace the instructions supplied by the battery manufacturer.

⚠ WARNING

For your safety, observe the following precautions when working with or around lift truck batteries:

- **Read, understand, and follow procedures, recommendations, and specifications in the battery and battery charger manufacturer's manuals.**
- **Always wear proper protective clothing including eye, face, and skin protection. Make sure and eye wash station is nearby.**
- **DO NOT smoke or use spark-producing devices near the battery.**
- **DO NOT expose the battery to open flames.**
- **Always charge batteries in a well-ventilated area to avoid hydrogen gas concentration.**
- **Clean batteries regularly; corrosion causes grounds and the possibility of sparks.**
- **Keep plugs, terminals, cables, and receptacles in good condition to avoid shorts and sparks.**
- **Charge batteries at the indicated rates.**
- **DO NOT lay tools, chains, or other metal objects on top of the battery.**
- **DO NOT overcharge batteries.**
- **DO NOT connect the battery charger plug to the lift truck.**
- **Ensure charger voltage is correct for the batteries being charged.**

Battery Care & Information cont'd

BATTERY INSPECTION AND CARE

Inspect the battery at least once a week. Make sure there are no loose connections. Clean dust, dirt, and electrolyte from the battery by washing the battery with a solution of baking soda and hot water. Use the following procedure:

- Read, understand, and follow procedures, recommendations, and specifications in the battery and battery charger manufacturer's manuals.
- Remove the battery from the lift truck.
- Mix one pound of baking soda with 1 gallon hot water.
- Tighten each vent cap (wear protective gloves).
- Use a brush with flexible bristles to apply the baking soda solution to the top of the battery. When fizzing stops, the acid has been neutralized.
- Clean the top and sides of the battery and rinse the battery completely with clean water.
- Vent plugs should be washed yearly or as needed, and the gas-escape holes should be inspected to ensure they are not plugged with dirt.

If the battery is being tested for a specific problem, it is recommended that the battery be cleaned before testing.

NOTE

Wet covers can be an indication of overfilling, leaky seals at posts, or excessive gassing during charging. When observed, contact service personnel.

BATTERY TESTING, CHARGING, & MAINTENANCE

DO NOT plug a battery charger into the lift

⚠ CAUTION

truck. This will severely damage the lift truck's electrical system.

For information on testing, charging, and maintaining your lift truck battery, consult your battery manufacturer's specifications and instruction manual.

BATTERY RECORD KEEPING

It is important to keep accurate records of your batteries. Battery failure can cause production slowdowns and increased battery operating costs. By keeping thorough records, irregularities can be spotted and corrected. Some of the problems to watch for when reviewing battery records are:

- Under or overcharging.
- Over discharging.
- Excessive water consumption.
- Excessive dirt and corrosion.
- Worn-out batteries.
- Excessive current consumption by trucks.

Your battery manufacturer can supply battery maintenance record forms to make your record keeping more efficient. Each battery should have a separate record, and each record should contain the following information:

- Battery number, type, serial number, and service data.
- Specific gravity and voltage readings for each cell.
- Temperature of the air and electrolyte.
- Electrolyte.
- Amperes.
- Condition of connectors, covers, sealing compound, and tray.
- General cleanliness.
- Number of total cycles.
- Normal or equalizing charge.
- Average specific gravity drop.
- Watering frequency.
- Operator comments and observations.

Battery Care & Information cont'd

CHANGING THE BATTERY

⚠ WARNING

Batteries are heavy and can cause serious injury. Use care to avoid injury. DO NOT put hands, arms, feet, and/or legs between the battery and a solid object. Make sure the battery is level when it is being moved.

Your forklift is equipped with rollers in the battery compartment for ease of removal and installation of the battery.

BEFORE REMOVING THE BATTERY:
- Disconnect the cable and make sure it will not be damaged when the battery is removed.
- Remove the battery gate on one side of the forklift.

BEFORE INSTALLING A BATTERY:
- Make sure the key switch is OFF.
- Ensure the battery gate on the opposite side is securely in place.
- Make sure the battery is clean.
- Make sure the battery is the correct voltage and amp-hour capacity.
- Make sure the battery weight is within the specifications on the SID Nameplate (see Page 24).

AFTER THE BATTERY IS INSTALLED:
- The battery must not be able to slide more than 0.5" (13 mm) from side to side or front to back. If necessary, install shims to achieve this specification.
- Ensure the machine screw and lock nut are installed in the battery connector. The emergency disconnect will not operate without them. Test the emergency disconnect after installation.

Fault Codes

Some of the common fault codes are explained below. Some fault codes (such as E01 and E02) can be cleared without shutting the truck off. Other fault codes (such as E05) require that the key switch be cycled.

E01 - Release throttle to resume operation. You must return the control handle to neutral then step on the brake pedal before moving the control handle into forward or reverse.

E02 - Release control handle & step on brake to resume lifting. Brake-lift interrupt is enabled. You must return the control handle to neutral then step on the brake pedal before moving the control handle into lift. Brake -lift interrupt can be disabled through programming.

E05 - Battery voltage out of range. Make sure the battery is the correct voltage for the truck (36V). The battery may be overcharged or may have a bad cell, etc.

E15 - Reposition right foot to resume operation. Your right foot must be properly positioned on the floorpad switch.

E61L/R - Left/Right motor brush wear failure. The brushes in the indicated drive motor need to be replaced. Maximum speed is limited.

E80 - Lift cutout due to low battery state of charge. The battery has been discharged to the limit set in programming. The lift system has been disabled. You must install a charged battery to resume operation.

E82 - Engage brake to continue POST. Release the brake pedal to continue the Power On Self Test.

OTHER FAULT CODES - Notify your supervisor and/or an authorized service technician if any OTHER FAULT CODES are displayed. A list of error codes and a description of each can be found on a decal on the underside of the top cover.

Maintenance Points

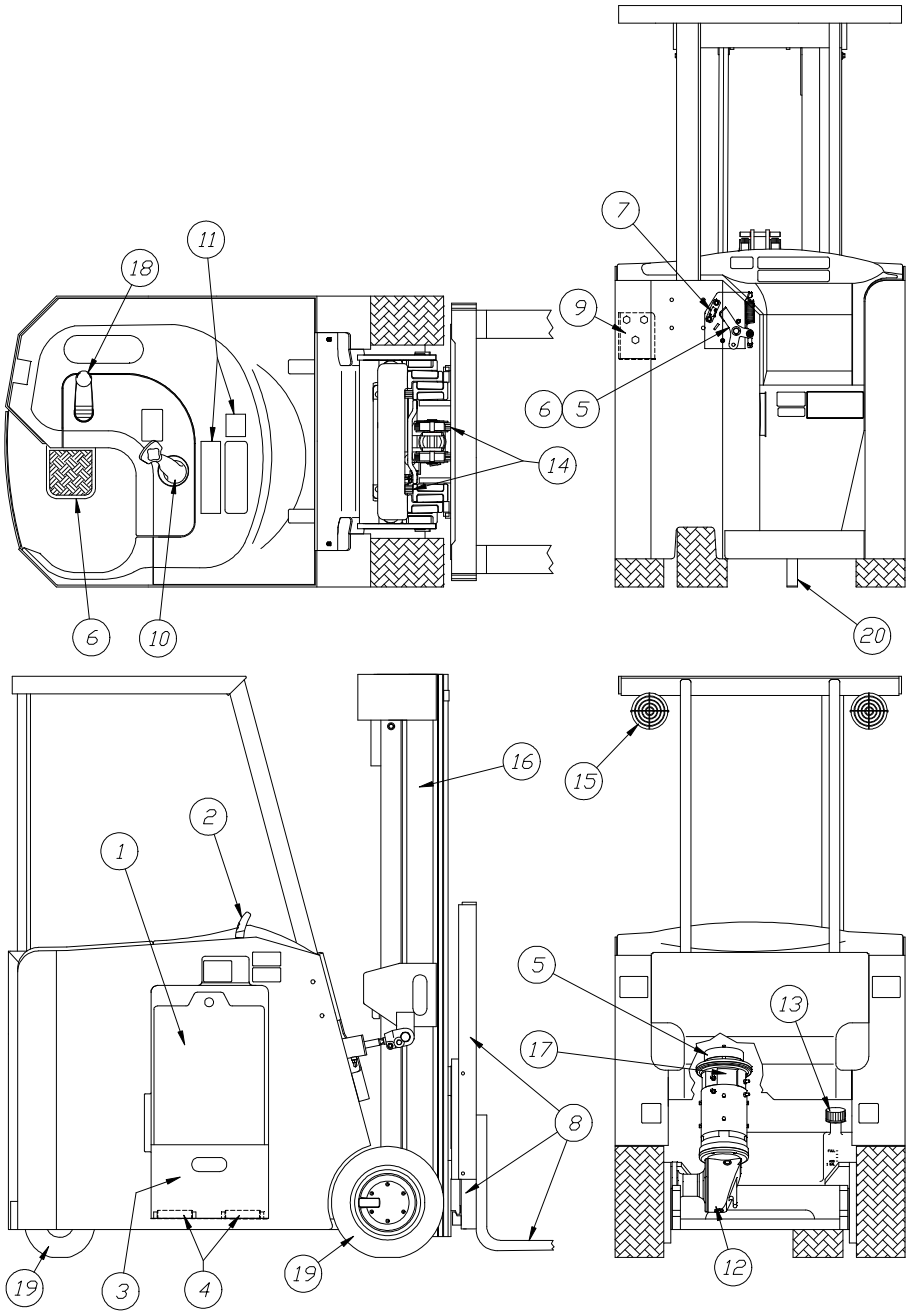

Scheduled Maintenance & Inspections

	COMPONENT	CHECK/ACTION HOURS DAYS	8 1	40 5	350 60	2000 360	Lubrication -40° F to 32° F	Lubrication 32° F to 120°F
1	Battery	Charge - Normal Charge - Equalizing Check water level and cleanliness Connector in good condition, bolt installed	X X	 X 	 X 	 	 	
2	Battery Disconnect	Check for free movement of the lever and that the lever disconnects the battery (Do not lubricate)	X					
3	Battery Gates	Check that they are securely in place	X					
4	Battery Rollers	Check that they are in place and battery cannot shift	X					
5	Brakes	Released when brake pedal is depressed and stops the unit within the specified distance when pedal is returned to up position Brake pads - inspect and replace (as needed)	X			 X		
6	Brake Pedal/ Brake Linkage	Check for smooth operation, no binding, and the pedal comes up when foot is removed Do not lubricate	X					
7	Brake Switch	Locks out travel capability when pedal is up	X					
8	Carriage/Load Backrest/Forks	Inspect for cracks, bends, and damage Torque lower plate bolts on Sideshift to 59 Lb-Ft Lubricate Sideshift Carriage as required	X		 X		 E	 E
9	Contactor Tips	Check condition, inspect for pitting, adequate tip contact surface, signs of burning			X			
10	Control Handle	Check for smooth and full movement forward, reverse, lift, and lower; check horn, tilt, and all auxiliary functions for operation Do not lubricate	X					
11	Decals	Check operational, safety, and warning decals Replace if missing or unreadable	X					
12	Gearbox	Check operation Check fluid level and fill (as needed) Change fluid	X		 X	 X	 C C	 C C
13	Hydraulic System	Check for leaks Check level and fill (as needed) Change hydraulic oil and filter Breather cap - check and clean	X	 X		 X	 B B	 A A
14	Lift Chains	Check for wear,damage, and cotter pins in place on connector pins at anchor bolts Lubricate and adjust		X	 X		 F	 G
15	Lights	Function when switched on	X					
16	Mast	Inspect for damage Check tilt cylinder mounting hardware	X X					
17	Motor Brushes	Check for wear and proper seating Replace (as needed)			X			
18	Steering	Turns without binding - no excess play	X					
19	Tires / Wheels	Inspect for cracks, gouges and wear Lubricate wheel & final drive pinion bearings Lubricate final drive gears	X			 X X	 E H	 E H
20	Static strap	In place and touches the floor	X					

LUBRICATION REFERENCE TABLE			
A	Texaco 32 / Tellus 32 / Mobil DTE 24	E	Mobilith SHC 220 Synthetic Grease NLGI 2 or equiv.
B	McCollister Arctic Blue Hydraulic Oil 3028	F	SAE 20W Motor Oil
C	Mobil SHC 50 Synthetic Gear Lub. or equiv.	G	SAE 40W Motor Oil
D		H	Mobilith SHC 007 Synthetic Grease NLGI 00 or equiv.

Warning Decals

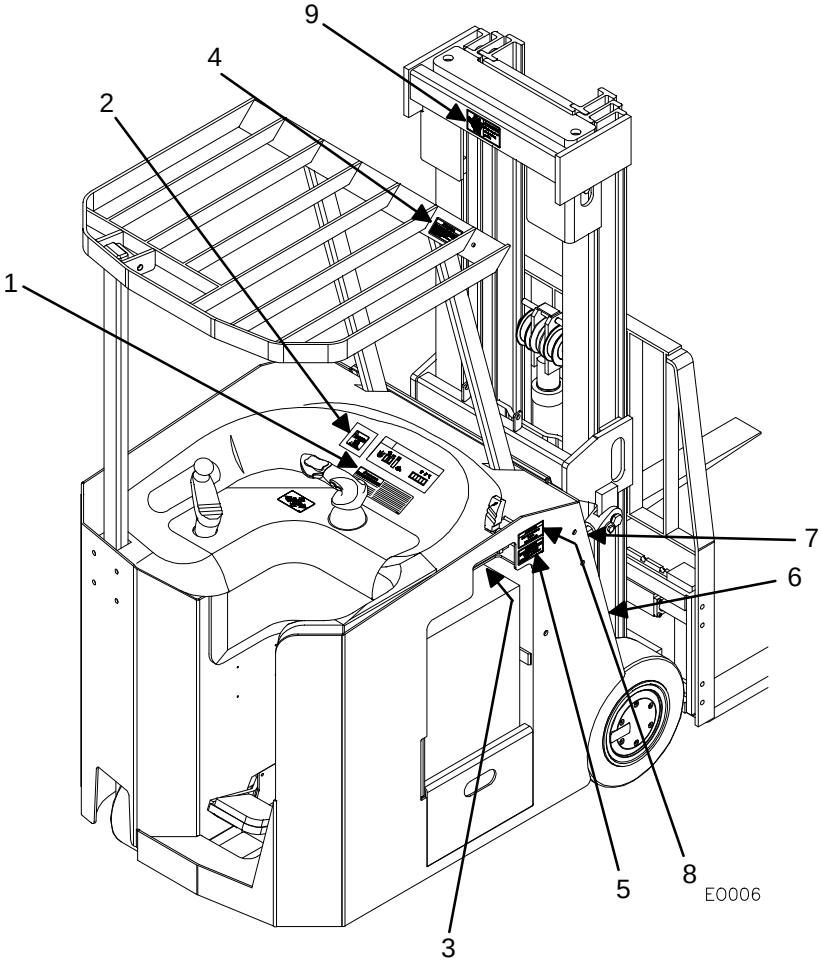

WARNING DECALS

1. Operator Warning (7619118)
2. Do Not Overload (7619119)
3. Battery Connector (7619112)
4. Overhead Guard (7619120)
5. Minimum Battery (7619123-X)
6. Pinch Points (7619115)
7. Mast Warning (7619113)
8. Disconnect Battery (7619114)
9. Moving Parts (7619117)

Below are the **warning decals** located on your forklift. If any of these decals become damaged or illegible, contact your authorized ***Schaeff*** dealer for replacements. Remove the damaged decal, clean the area and apply the new decal.

⚠ WARNING

Failure to observe the following instructions can cause the truck to tip, load to fall, serious injury or death.

- Do not operate this truck unless you have completed approved training and are an authorized operator. For your safety and the safety of others.
- Read and observe all warnings, operating, inspection and maintenance instructions on the truck, in the operator / service manuals and from the employee training program.
- Inspect truck thoroughly before using and report any unsafe conditions immediately. Do not operate truck until unsafe condition is corrected.
- Keep one foot only on brake pedal whenever operating the truck.
- Hands, feet, and other body parts outside of the operator's compartment can be pinned or crushed. Keep all portions of the body inside of operator's compartment during operation and until truck comes to a complete stop.
- Never load truck beyond its rated capacity. Loading beyond rated capacity will affect stability which may cause tip over.
- Space forks as wide as practicable to stabilize load. Center load and keep the load against the carriage. If provided, center side-shifter in carriage.
- Do not handle unstable or loosely stacked loads. Lift and lower with mast vertical or tilted slightly back - never forward.
- Use extreme care when traveling. Start and stop smoothly. Keep a clear view and avoid traffic, pedestrians, bumps, holes, loose material, racks, dock edges and overhead obstructions.
- Look in direction of travel. Sound horn at cross aisles and whenever vision is obstructed. When traveling make sure tail swing area is clear.
- Do not turn on, or angle across, an incline. When truck is loaded, travel with load uphill. When truck is empty, travel with lifting mechanism downhill.
- Do not allow anyone to stand near the truck during operation. Do not allow anyone to stand under the load or lifting mechanism at any time.
- Travel with load or lifting mechanism as low as possible and tilted back.
- Do not carry passengers. If lifting people, use a secured safety platform, use extreme care, center side-shift and keep mast vertical. Engage brakes and stay in operator compartment.
- Before leaving operator compartment lower the load and shut off the power. Remove the key when leaving a truck unattended. Do not leave truck unattended on ramps.

7619118

1

2

⚠ WARNING

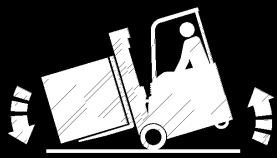

Never load truck beyond its rated capacity.
Loading beyond rated capacity can cause drive axle(s) to break, truck to tip over, load to fall, serious injury and or death. *See name plate for rated capacity.*

3

⚠ WARNING

Never use a battery without a bolt in place

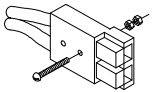

Attach 1/4-20 x 1 1/2 RD. HD. MACH screw to battery connector use (2) 1/4-20 hex head nut

Emergency disconnect lever will not work if bolt is not in place

4

⚠ WARNING

Do not remove this overhead guard

This overhead guard provides reasonable protection to the operator from falling objects, but cannot protect against every possible impact. REPLACE if damaged.
This overhead guard complies with: O.S.H.A. requirements and safety standards B56.1

5

⚠ WARNING

Minimum battery size allowed

15.62 x 38.25

Undersized battery can affect handling and stability of unit.

6

⚠ WARNING

7

⚠ WARNING

8

⚠ WARNING

Disconnect battery before servicing unit

9

⚠ WARNING

Stay clear of all moving parts!

Notes

Notes

SCHAEFF

Providing VALUE Solutions

Your Schaeff dealer is:

_____

_____

_____

_____

Phone Number: (_____) _____

Model: _____

Serial Number: _____

Date of Installation: _____

Schaeff Inc. w 9655 Industrial Drive w Bridgeview, IL 60455w USA
Tel: (708) 430-5301 w Fax: (708) 430-5331
E-Mail: info@schaeffinc.com w www.schaeffinc.com

© Schaeff Inc. 7/97
Part Number 6840001
Printed in U.S.A.